GOLDEN LIGHTING SPECIFICATION SHEET FOR FIXTURE

CUSTOMER CODE: GOLDEN

☐ DRAFT
PROTOTYPE
■ FINAL SAMPLE

DATE: 10/29/2007
REV DATE: 11/23/2007
DESIGN # A020001DB
ITEM # 2501-M1L NWB
DESC. 1Lt Mini Pendant

FIX. SIZE: 7'' WIDTH
DIA.
EXT.
15-1/2" HEIGHT

DRAWING / PHOTOS

SHADE TOP VIEW

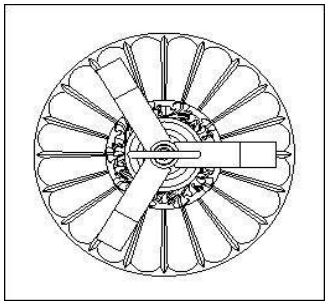

MATERIAL: METAL, GLASS, POLY
FINISH : NWB

SHADE CODE: ____ MATERIAL: ____ SHADE SIZE: ____
SHAPE: ____ PANEL: ____ PIPING: ____ FINISH: ____
GLASS CODE: GP0645 GLASS SIZE: 7" W ____ L FINISH: Fleur de Lille glass
5-1/8" H ____ D FINISH: ____

HOW TO INSTALLATION SHADE TO FIXTURE ☐ CLIP ☐ UNO ■ OTHERS FINISH: ____

ELEC. WIRE LENGTH: 10'
GAGE: SPT-1 18# 105℃ COLOR: BROWN

CHAIN LENGTH: 6' MATERIAL: METAL
THICKNESS: Φ3.8 FINISH: NWB

PRIMARY LAMPS:
BULBS TYPE: TYPE A SOCKET TYPE: E27 Q'TY: 1 WATT: 100W
SUPPLIED: ☐ YES ■ NO Q'TY: ____ WATT: ____

SECONDARY LAMPS:
BULBS TYPE: ____ SOCKET TYPE: ____ Q'TY: ____ WATT: ____
SUPPLIED: ☐ YES ■ NO Q'TY: ____ WATT: ____

TOTAL WATTAGE: 100W

SOCKET: ■ PORCELAIN ☐ PHENOLIC ☐ SCREW SHELL ☐ OTHERS
☐ W / METAL SLEEVE ☐ W / POLY SLEEVE ☐ W / PLASTIC SLEEVE FINISH: WHITE

PACKING
1 PCS / INNER BOX ☐ COLOR BOX ☐ COLOR LABLE W/WHITE BOX ■ BROWN BOX
INNER BOX SIZE: 15-3/4" * 10-1/4" * 14-3/4" CARTON CUBE: 1.38'
6 PCS / MASTER CARTON ☐ COLOR BOX ☐ COLOR LABLE W/WHITE BOX ■ BROWN BOX W/LINE DRAWING
MASTER CARTON SIZE: 30-3/4" (L)X 16-1/2" (W)X 30-1/8" (H) CARTON CUBE: 8.85'

N.W. 2.25 KGS / INNER BOX
13.50 KGS / CTN

G.W. 3.20 KGS / INNER BOX
20.37 KGS / CTN

CERTIFICATE: ■ UL ■ CUL ☐ NOM ☐ CE ☐ OTHERS
NUMBER: UL/CUL# E212492
ENVIRONMENTAL LOCATION: ■ DRY ☐ DAMP ☐ WET